IG RAILING™

ILLUMINATED GLASS RAILING

Frameless Glass Railing & Lighting System

INSTALLATION GUIDE

www.IGrailing.com

Brought to you by Spartan Railing LLC

ICC EVALUATION SERVICE®

NADRA NORTH AMERICAN DECK AND RAILING ASSOCIATION

NATA WORLD RECOGNISED ACCREDITATION

BEFORE YOU BEGIN

- Low Iron glass must be used to support our lighting system as advertised. Traditional "float glass" will not create illumination and violates the warranty.
- Compliance with local building codes is the responsibility of the installing party. IBA (Illuminated Balustrade Australia), nor her affiliates are responsible for code interpretations. Contact us at **info@IGrailing.com** for product testing results.
- Due to the weight and nature of glass panels we recommend a two-person lift when moving the panels.
- IG Railing Glass is low iron tempered glass. Each piece is durably packaged with corner guards, foam wrap, and individually boxed. Opened boxes are not returnable. When moving and storing glass, protect it in a manner that the edges do not make contact wtih hard surfaces such as concrete.
- We recommend the following safety gear when handling glass: safety glasses, safety boots, and gloves.

RECOMMENDED TOOLS

LEVEL

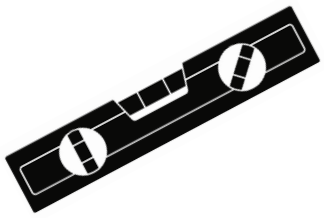

ALLEN KEYS
4MM & 6MM

TAPE MEASURE

CHALK LINE

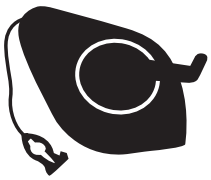

3/4" & 1/4" DRILL BITS

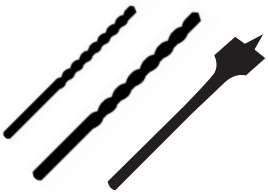

DRILL

PENCIL

COMPONENTS

GLASS PANELS

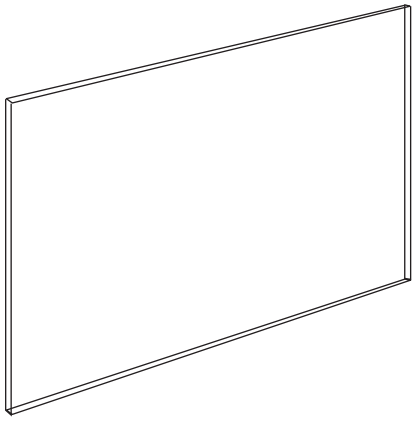

SPIGOTS

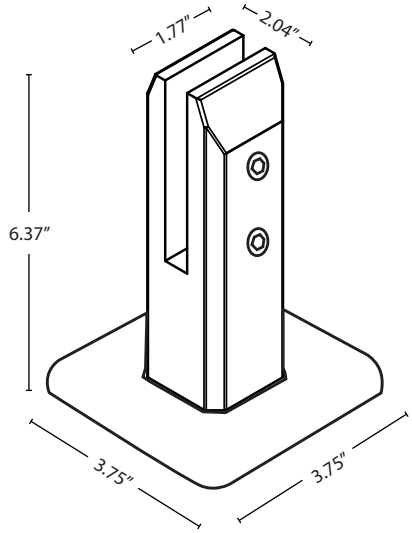

SCREW PLATE & SPACERS

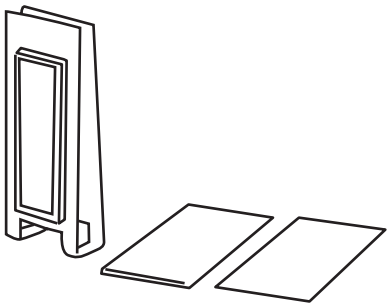

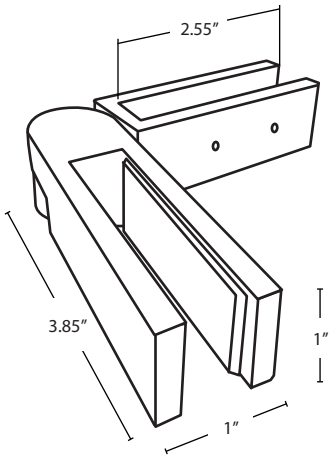

Adjustable Clamp
(Intended for glass to glass corners or angles)

CLAMPS

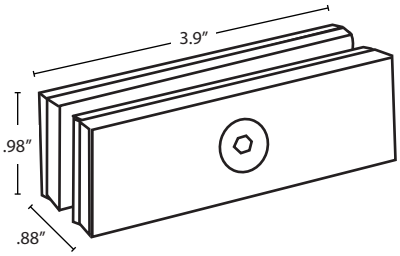

180º Clamp
(Standard glass to glass connector)

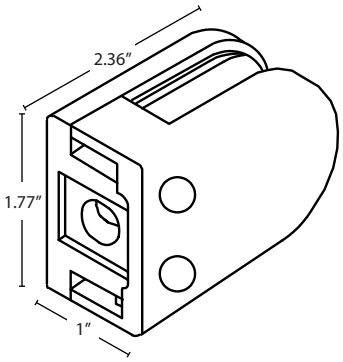

End Clamp
(Option to connect railing section end to structure)

TOP RAILS

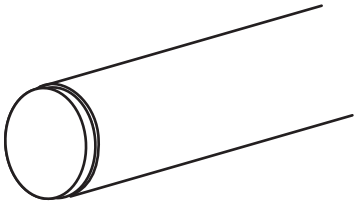

LIGHT KIT

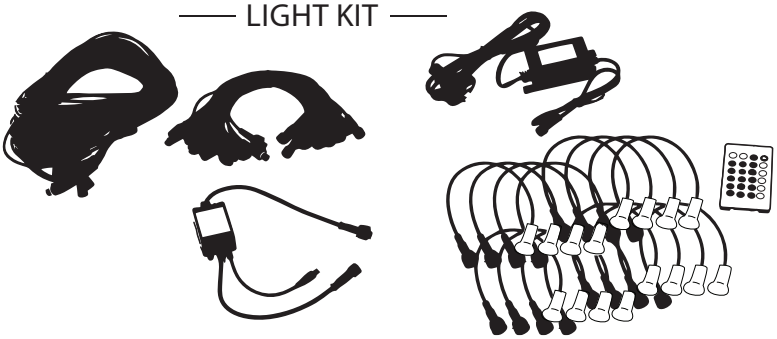

INSTALLATION

NOTE:

- For installation on wood deck surfaces, spigot screw holes must be aligned with proper deck blocking. Before installing the spigots, make sure to install blocking where required.

- For installation on concrete surfaces, we suggest allowing a min 2″ gap from the concrete slab edge to the closest spigot drilling hole, which will bring the centerline of your spigot (and therefore your glass fence centerline) to about 3-½″ away from the edge.

PART MEASURMENTS:

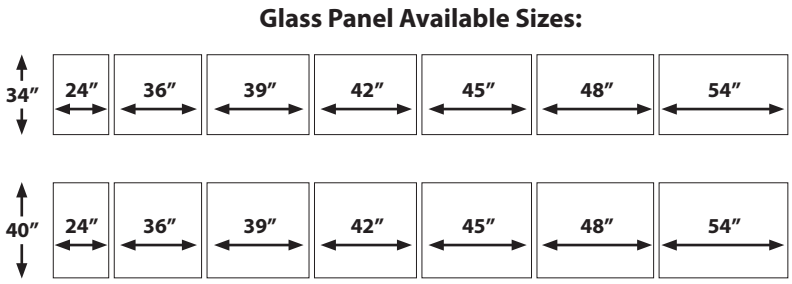

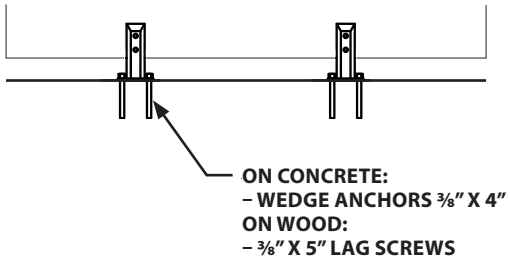

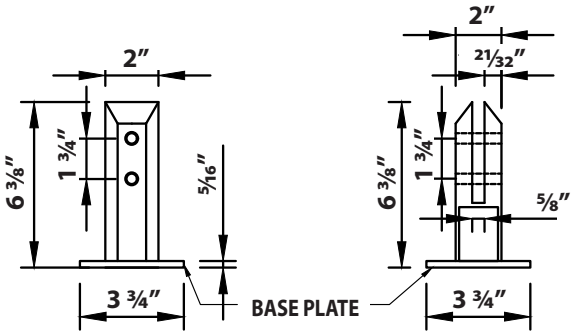

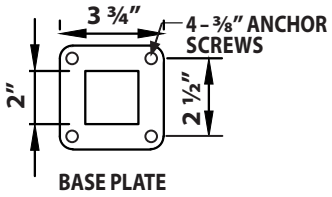

1 MARK THE RAILING CENTERLINE

Mark the glass panel centerline across all railing sections. Note where intersecting centerlines meet for panel sizing and placement.

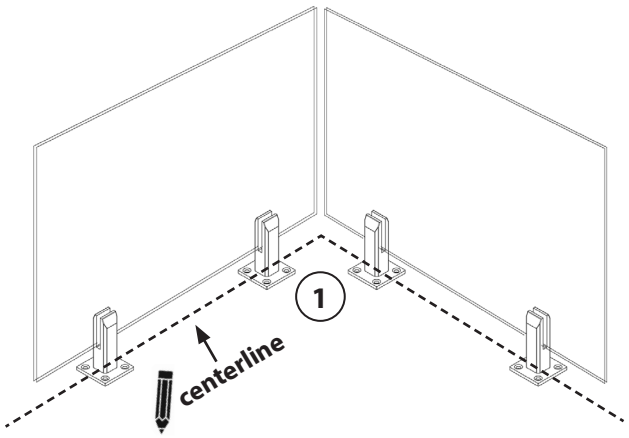

2 MARK THE PANEL POSITIONS

Mark the starting and finishing point of each glass panel along the railing centerline. Make sure to account for desired spacing between each panel. Panel gaps are recommended between 1/2″ and maximum of 2″.

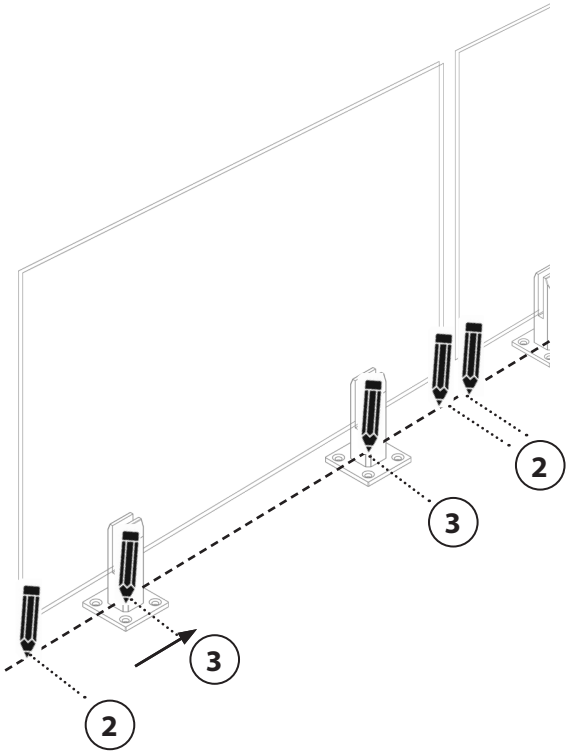

3 MARK THE SPIGOT POSITIONS

To mark the spigot center, measure from line 2 in for 1/4 length of the glass used:

24″ wide = 6″ in from edge
36″ wide = 9″ in from edge
39″ wide = 9.75″ in from edge
42″ wide = 10.5″ in from edge
45″ wide = 11.25″ in from edge
48″ wide = 12″ in from edge
54″ wide = 3 spigots required. 12″ in from each edge with middle spigot centered between each outside spigot.

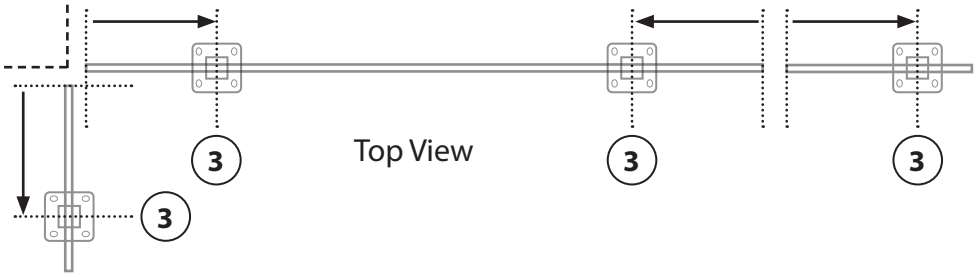

4 ADD TRIPLE BLOCKING TO SUPPORT SPIGOT SCREWS

Vertical blocking vs. horizontal blocking is required to build adequate structural integrity underneath the decking to receive 4 lag screws into each spigot.

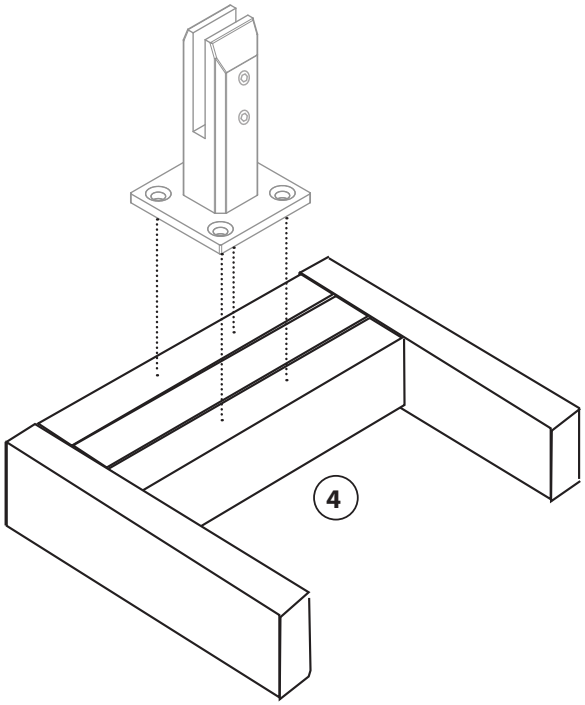

5 INSTALLING THE SPIGOTS

A. Using a 3/4" drill bit, drill a hole on the spigot centerline. This will be used to route the LED lighting into the spigot.

B. Align your spigot across the railing centerline and on its respective reference point completed in Step 3. Mark the 4 anchor points.

C. Using a 1/4" -5/16" drill bit, drill holes for the 3/8" lag head screws.

D. Secure the spigot in place by inserting 4 lag head screws. Spigot's should be installed with set screws facing the interior of deck. Tighten the 4 lag head screws firmly.

E. Put the spigot cover in place.

A.

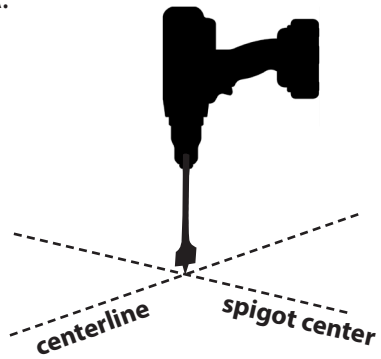

B.

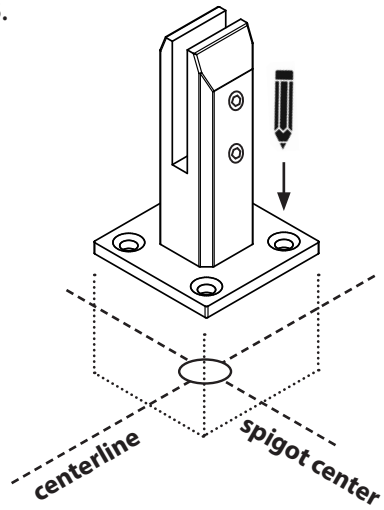

C.

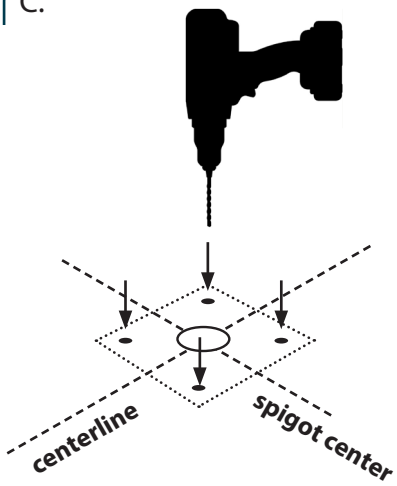

D.

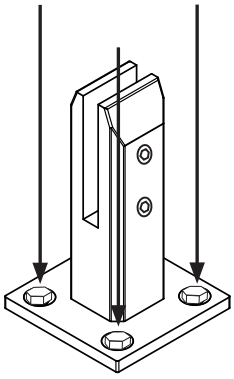

E.

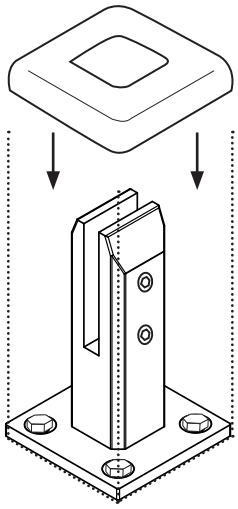

6 INSTALLING THE LED LIGHTING

NOTE: Refer to the IG Railing Light Kit Installation Guide for more specifics on the light kit.

A. Feed the end of the main cable extension lead through the center hole and out the top of spigot.

B. Connect the end of the LED light to the end of the extension lead.

C. Once all the lights are working correctly, feed the extension lead and LED light cable back through the hole in the spigot. The light should sit flush on the spigot base.

A.

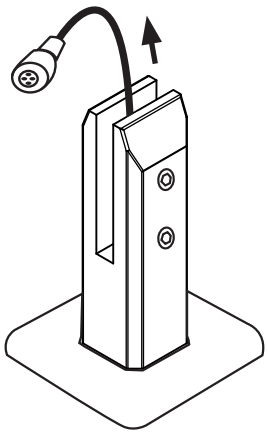

B.

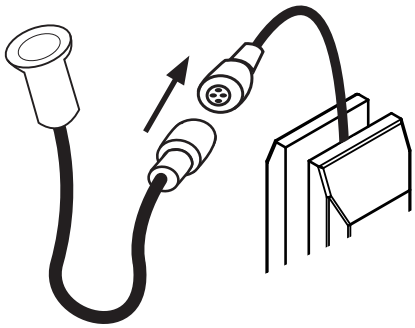

C.

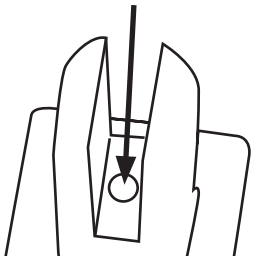

7 INSTALL THE SCREW PLATE

D. Before inserting, flex screw plate into a V shape using your hands.

E. Ensure the stainless steel plate faces the side with spigot set screws. Then insert into the spigot, lined up with the hole at base.

D.

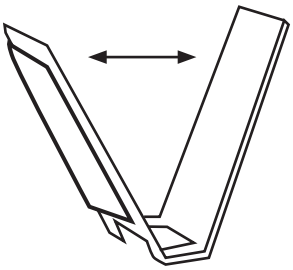

E.

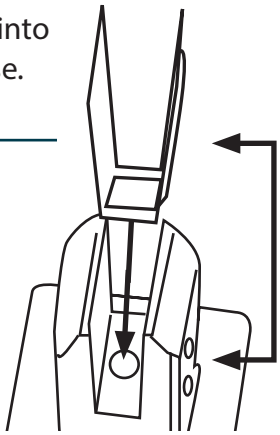

8 INSTALLING THE GLASS RAILINGS

A. Insert the glass panels and align so it is flush with the marks done in step 2.

B. Use the included shims as needed to adjust the glass plumb from panel to panel.

C. Secure the glass panel into the spigot by tightening the allen key screws.

A.

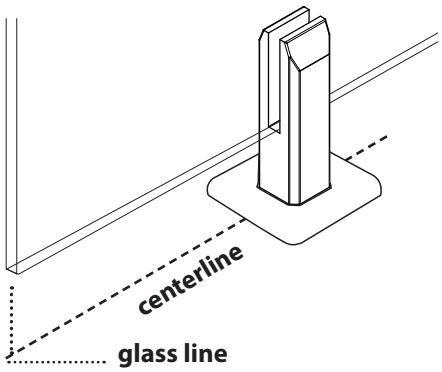

B.

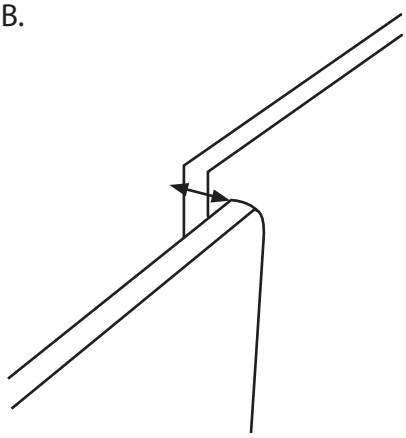

C.

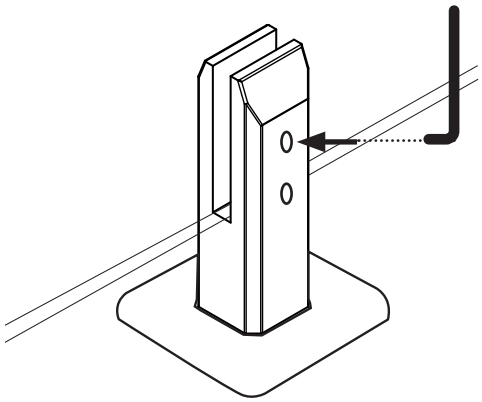

9 INSTALLING THE GLASS TO GLASS CLAMPS

D. Loosen the allen screw. Insert included protective sleeves between the glass and clamp.

E. Slide the clamp down in place with set screw facing the interior of deck. Set the clamp at desired height. We recommend a 2" gap from the top of the glass to the top of the clamp. Manually tighten the allen screw to secure clamp.

D.

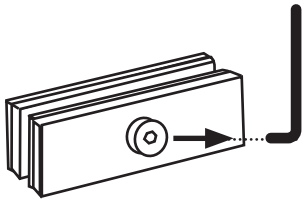

E.

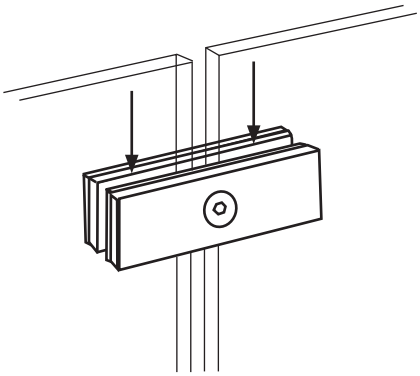

9 INSTALLING THE GLASS TO GLASS CLAMPS (CONTINUED)

F. For adjustable glass clamps, follow the same steps as D and E. The adjustable clamp is the recommended connector to use for corner connections of glass to glass. Intended for 90 degree corners, but offers a range of approximately 42 to 180 degrees.

G. (Optional) To connect railing section end to an existing structure, us a D-Clamp. Secure the D clamp to structure first, then insert glass railing and manually tighten the allen screws to secure clamp.

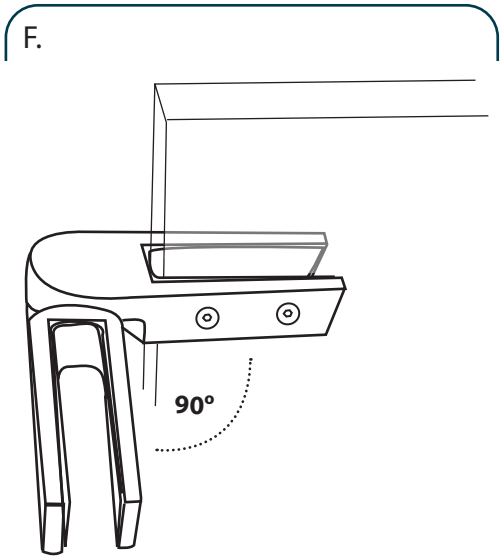

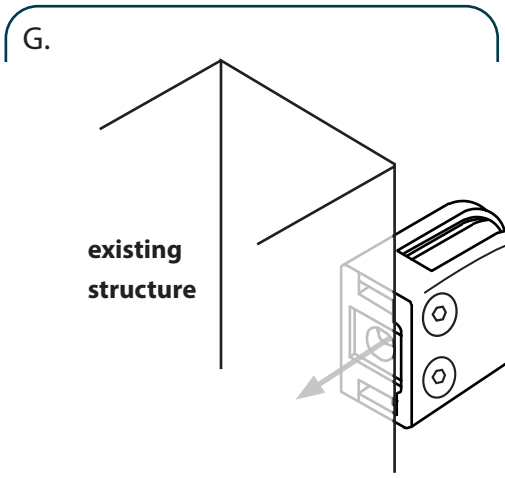

10 INSTALLING OPTIONAL TOP RAIL

Where AC439 compliance is required, install an IG Railing Top Rail. Available in Round or Square.

A. Push gusset over glass first.

B. Next press top rail over the gusset onto glass.

C. Press any endcaps onto the rail ends.

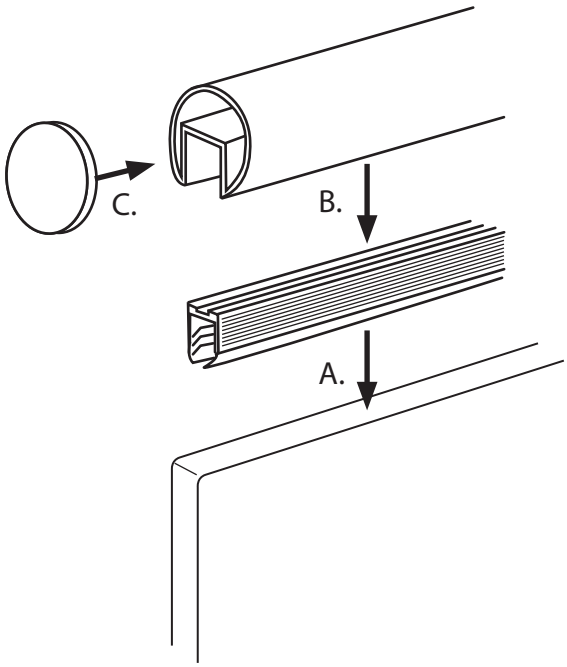

NOTES

IG RAILING™
ILLUMINATED GLASS RAILING